HRM Baseline Nov 2013_OV-6c Context Manage Personnel Promotion (Business Process)
System Architect
Tuesday, October 29, 2013 12:43 PM
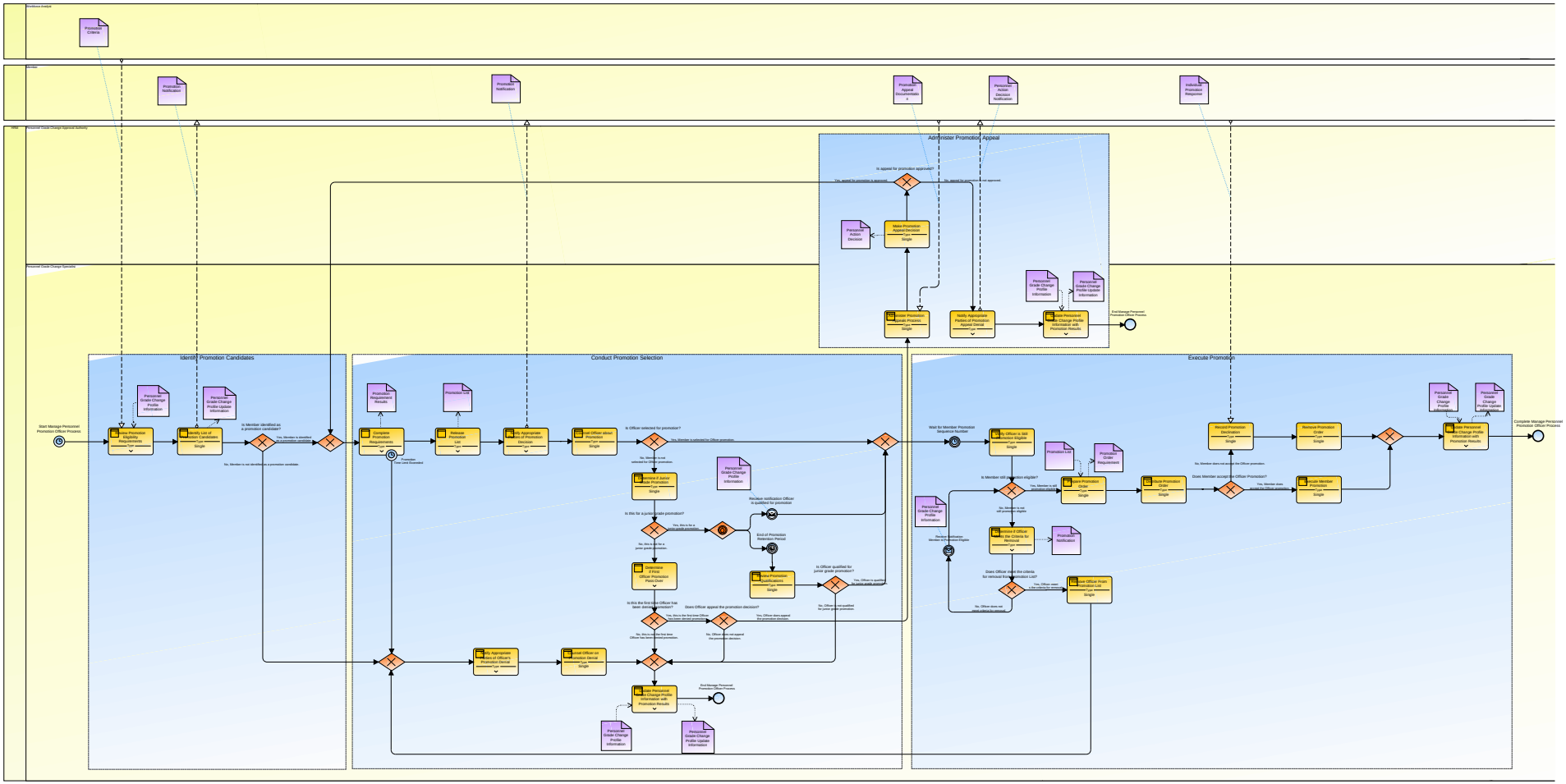
This does not include the civilian promotion process, which will be captured in the future.